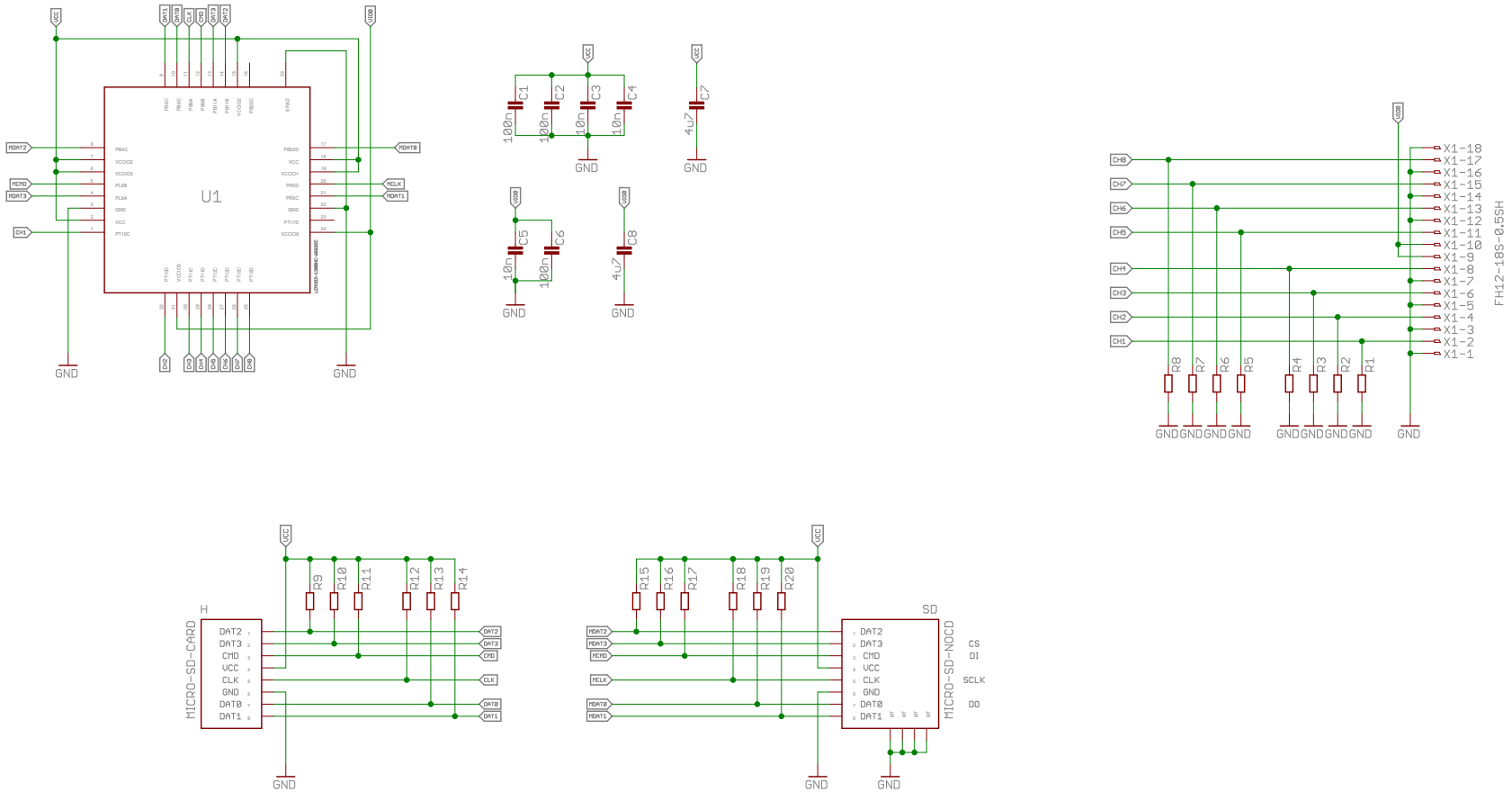

uSD Remote Adapter

SD Interface

sd_remote_v0.2

Copyright (C) 2019 H.Poetzl
Licensed under CERN OHL v.1.2

Sheet: 1/1