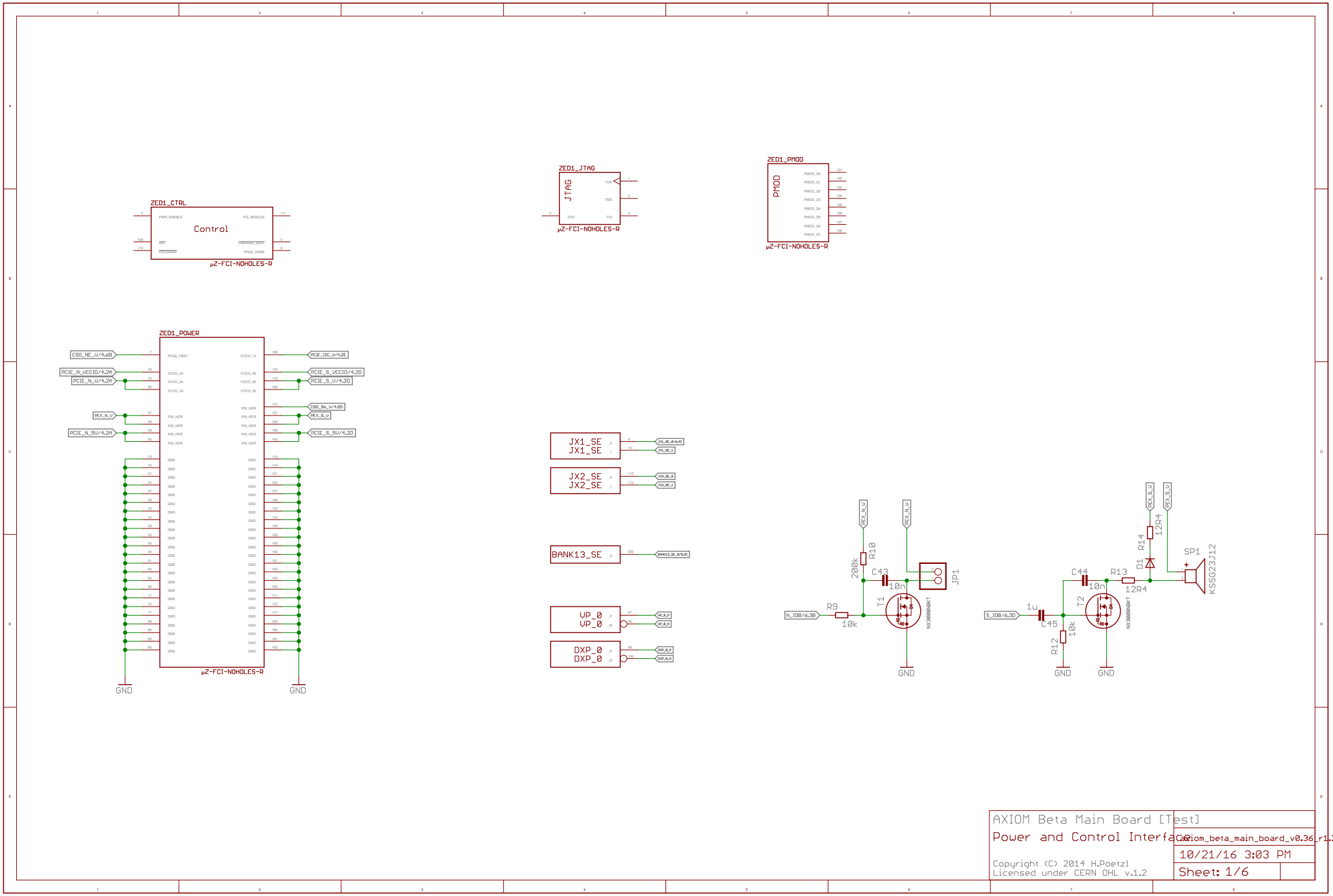

AXIOM Beta Main Board [Test]

Power and Control Interface

axiom_beta_main_board_v0.36_r1.2

10/21/16 3:03 PM

Sheet: 1/6

Copyright (C) 2014 H.Poetzl
Licensed under CERN OHL v.1.2

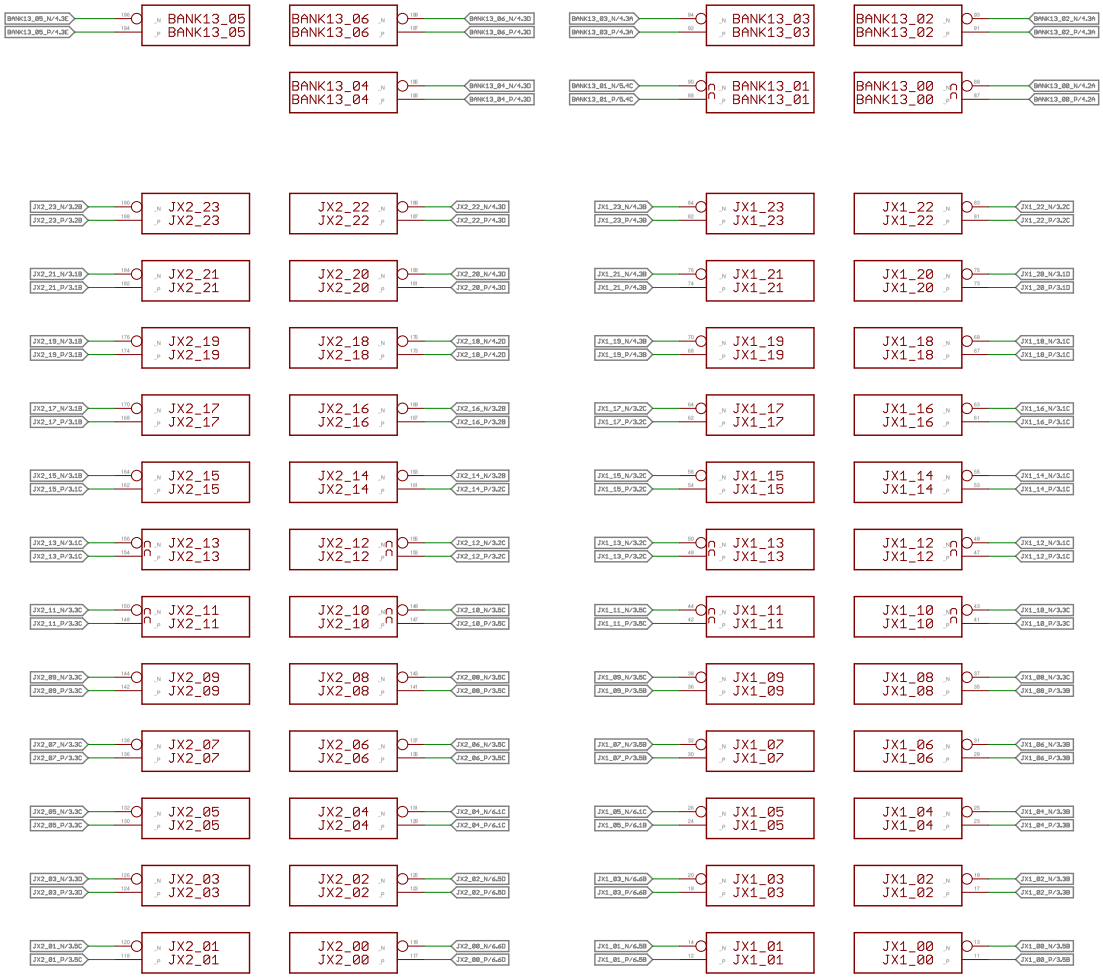

AXIOM Beta Main Board [Test]

ZYNQ LVDS Interface

Copyright (C) 2014-2015 H.Poetzl
Licensed under CERN OHL v.1.2

axiom_beta_main_board_v0.36/r1.2

10/21/16 3:03 PM

Sheet: 2/6

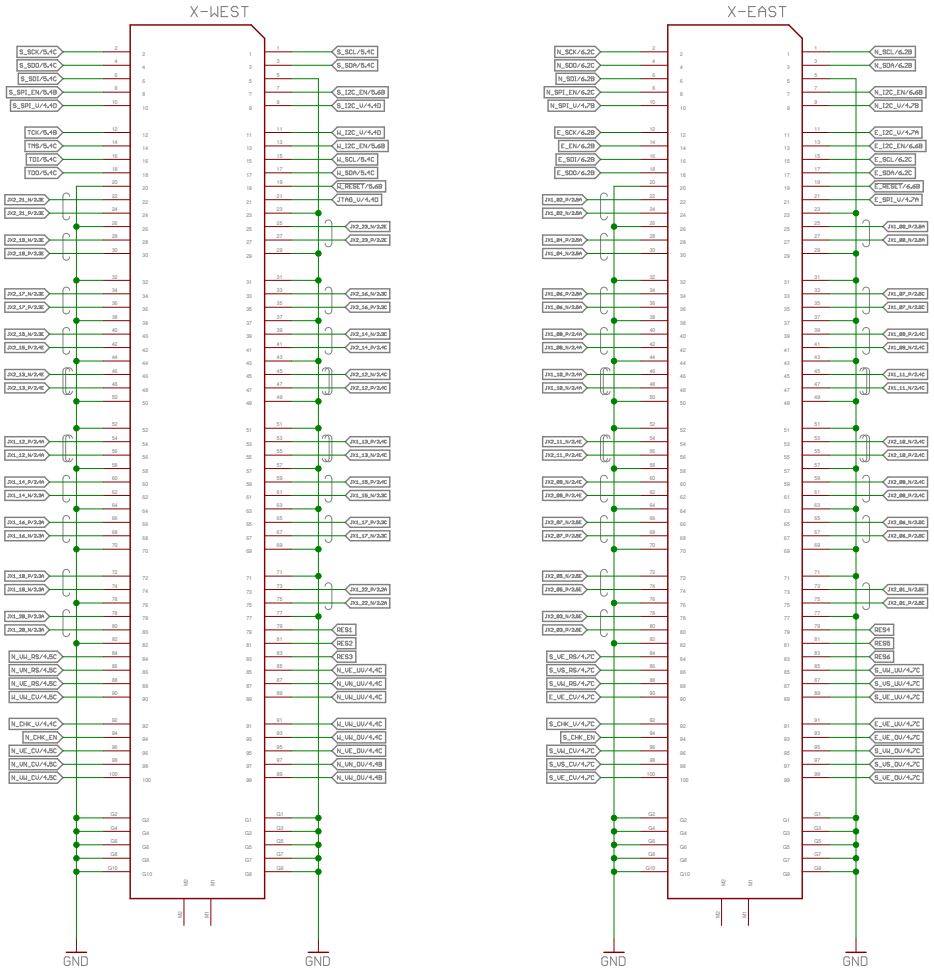

AXIOM Beta Main Board [Test]

Interface Board Connection

axiom_beta_main_board_v0.36_r1.2

10/21/16 3:03 PM

Sheet: 3/6

Copyright (C) 2014-2015 H.Poetzl
Licensed under CERN OHL v.1.2

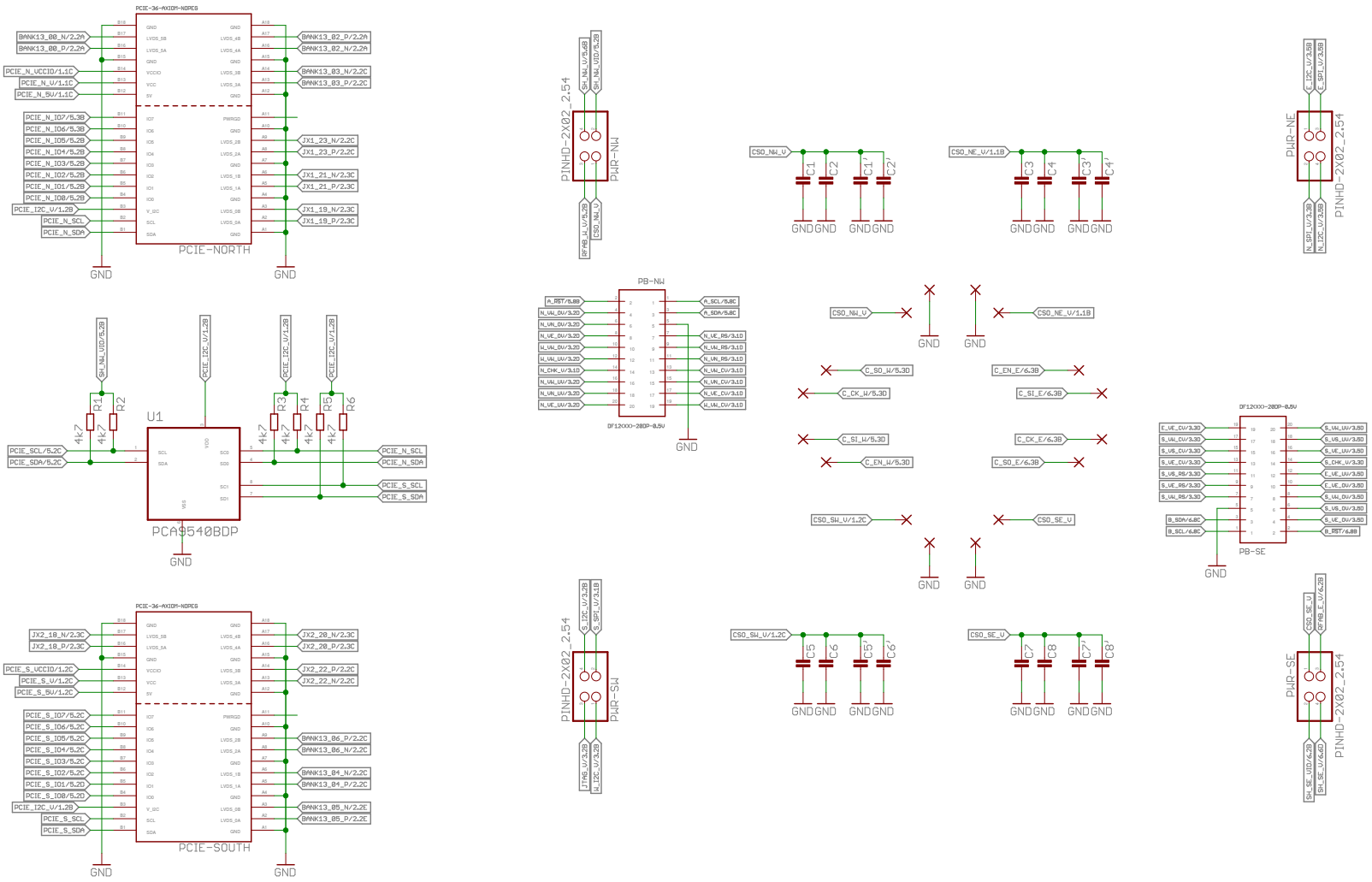

AXIOM Beta Main Board [Test]	
PCIE, Power, Center Area	axiom_beta_main_board_v0.36_r1.2
	10/21/16 3:03 PM
Copyright (C) 2015 H.Poetzl Licensed under CERN OHL v.1.2	Sheet: 4/6

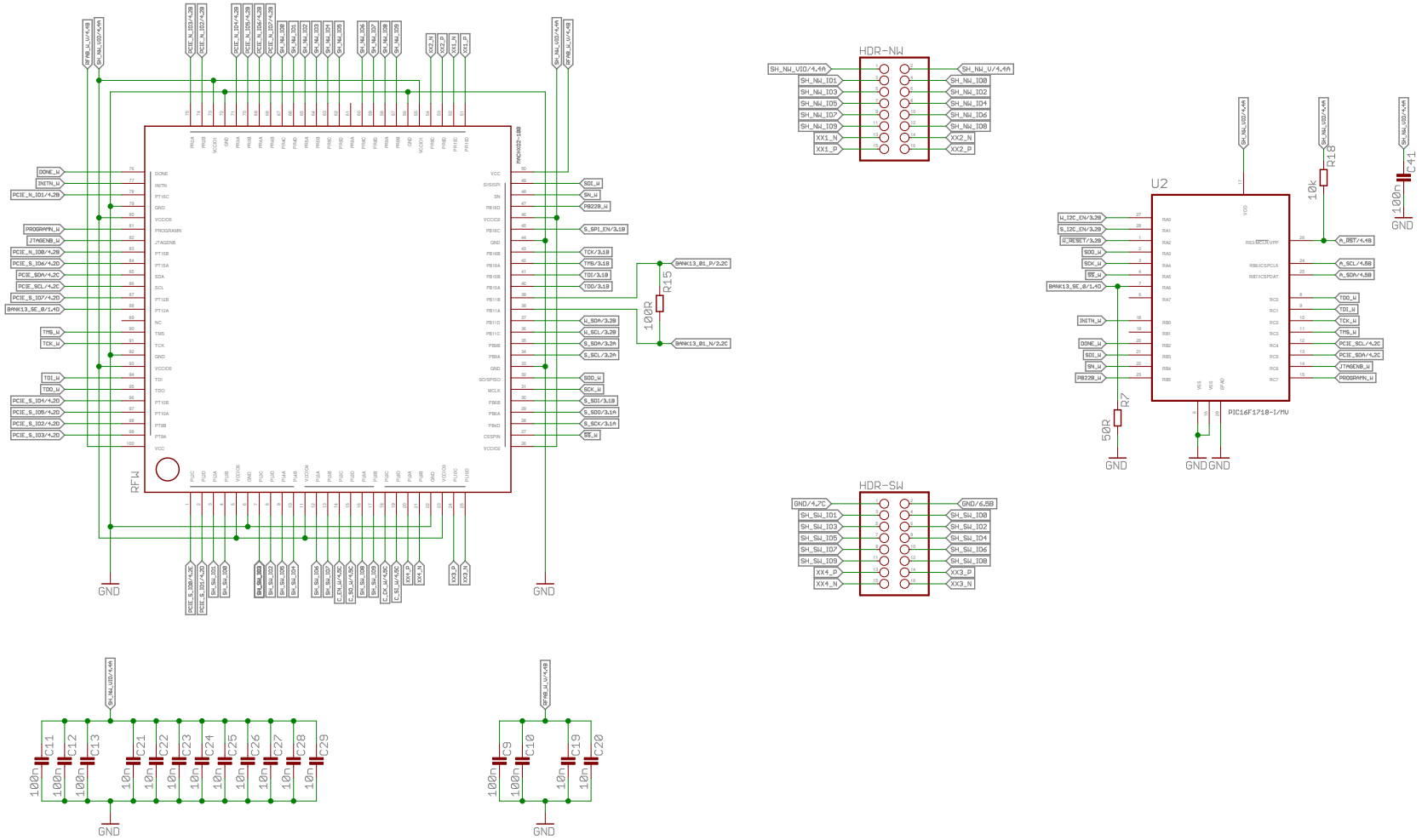

AXIOM Beta Main Board [Test]

Interface Fabric West

Copyright (C) 2015 H.Poetzl
Licensed under CERN OHL v.1.2

Sheet:

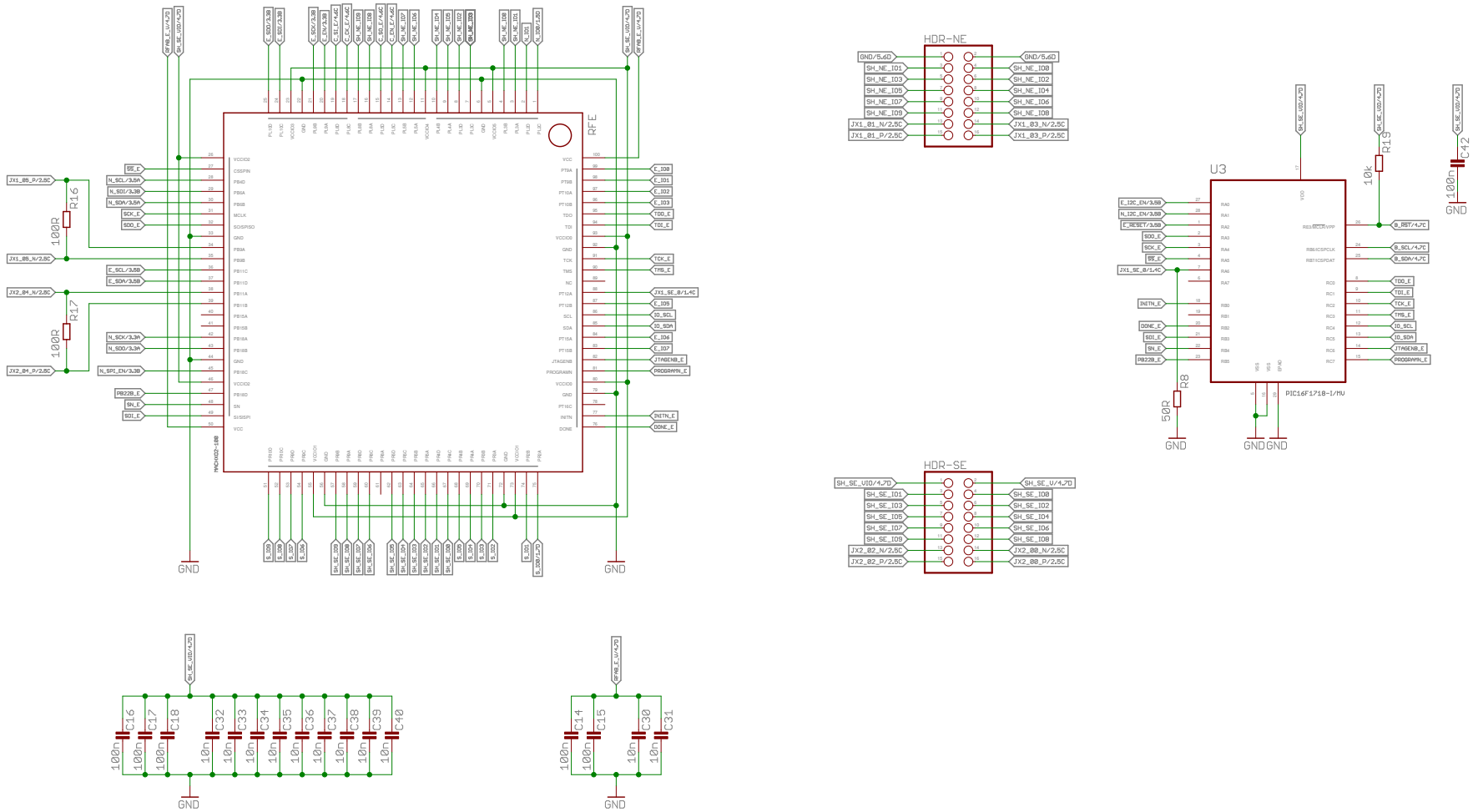

AXIOM Beta Main Board [Test]

Interface Fabric East

Copyright (C) 2015 H.Poetzl
Licensed under CERN OHL v.1.2

Sheet: